MAYKA

100% MADE IN ITALY

CERAMICA DOLOMITE

Cod. **D483566** BTW BIDET

DOP EN 14528

BTW, with central taphole; supplied with fixing set for hidden attachment.

TECHNICAL DATA

Width	358 (mm)
Depth	550 (mm)
Height	410 (mm)
Weight	24.2 (kg)
Installation type	back to wall
Overflowing	YES

Fixings included

Hidden fixation set

One-hole

FINISHES

01	41	81	45	65	71	66	06	47	07
White	Matt White	Matt Black	Concrete Grey	Antique Pink	Sky Blue	Matt Natural Beige	Glossy Natural Beige	Matt Natural Beige	Glossy Alpine Brown

48
Matt Red Wine

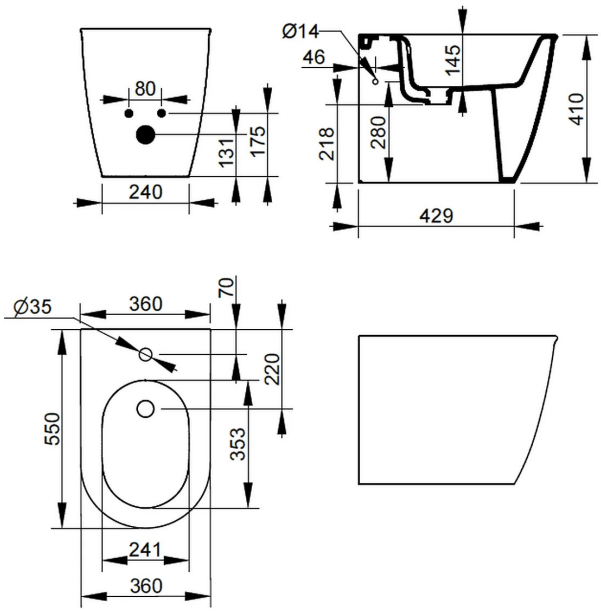

ACCESSORIES

F953299
fixing set for hidden btw installation.
(included)

Ceramica Dolomite reserves the right to change technical data sheets and operating characteristics at any time without prior notice.
The dimensions and weights shown may differ slightly from the actual pieces, due to the tolerance characteristics inherent in the ceramic material and its manufacturing process.

Ceramica Dolomite S.p.A.
via Cavassico Inferiore 160 |
32026 Borgo Valbelluna-BL-Italy | +39 0437 5581
info@ceramicadolomite.it | www.ceramicadolomite.it