# MAYKA

100% MADE IN ITALY

CERAMICA DOLOMITE

Cod. **D483506** BTW BIDET

DOP EN 14528

BTW, with central taphole; supplied with fixing set for hidden attachment.

**TECHNICAL DATA**

| | |
|---|---|
| Width | 358 (mm) |
| Depth | 550 (mm) |
| Height | 410 (mm) |
| Weight | 24.2 (kg) |
| Installation type | back to wall |
| Overflowing | YES |

Fixings included

Hidden fixation set

One-hole

**FINISHES**

| 01 | 41 | 81 | 45 | 65 | 71 | 66 | 06 | 47 | 07 |
|---|---|---|---|---|---|---|---|---|---|
| White | Matt White | Matt Black | Concrete Grey | Antique Pink | Sky Blue | Matt Natural Beige | Glossy Natural Beige | Matt Natural Beige | Glossy Alpine Brown |

48
Matt Red Wine

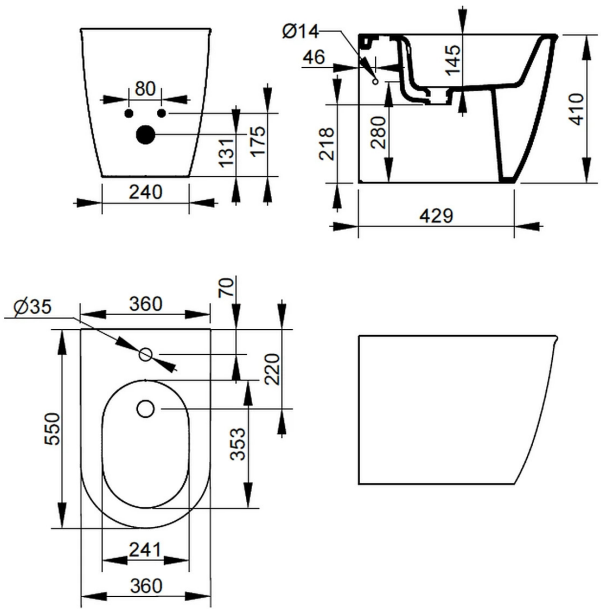


**ACCESSORIES**

F953299
fixing set for hidden btw installation.
(included)

Ceramica Dolomite reserves the right to change technical data sheets and operating characteristics at any time without prior notice.
The dimensions and weights shown may differ slightly from the actual pieces, due to the tolerance characteristics inherent in the ceramic material and its manufacturing process.

**Ceramica Dolomite S.p.A.**
via Cavassico Inferiore 160 |
32026 Borgo Valbelluna-BL-Italy | +39 0437 5581
info@ceramicadolomite.it | www.ceramicadolomite.it